1902301 Magnum 5 ST /E

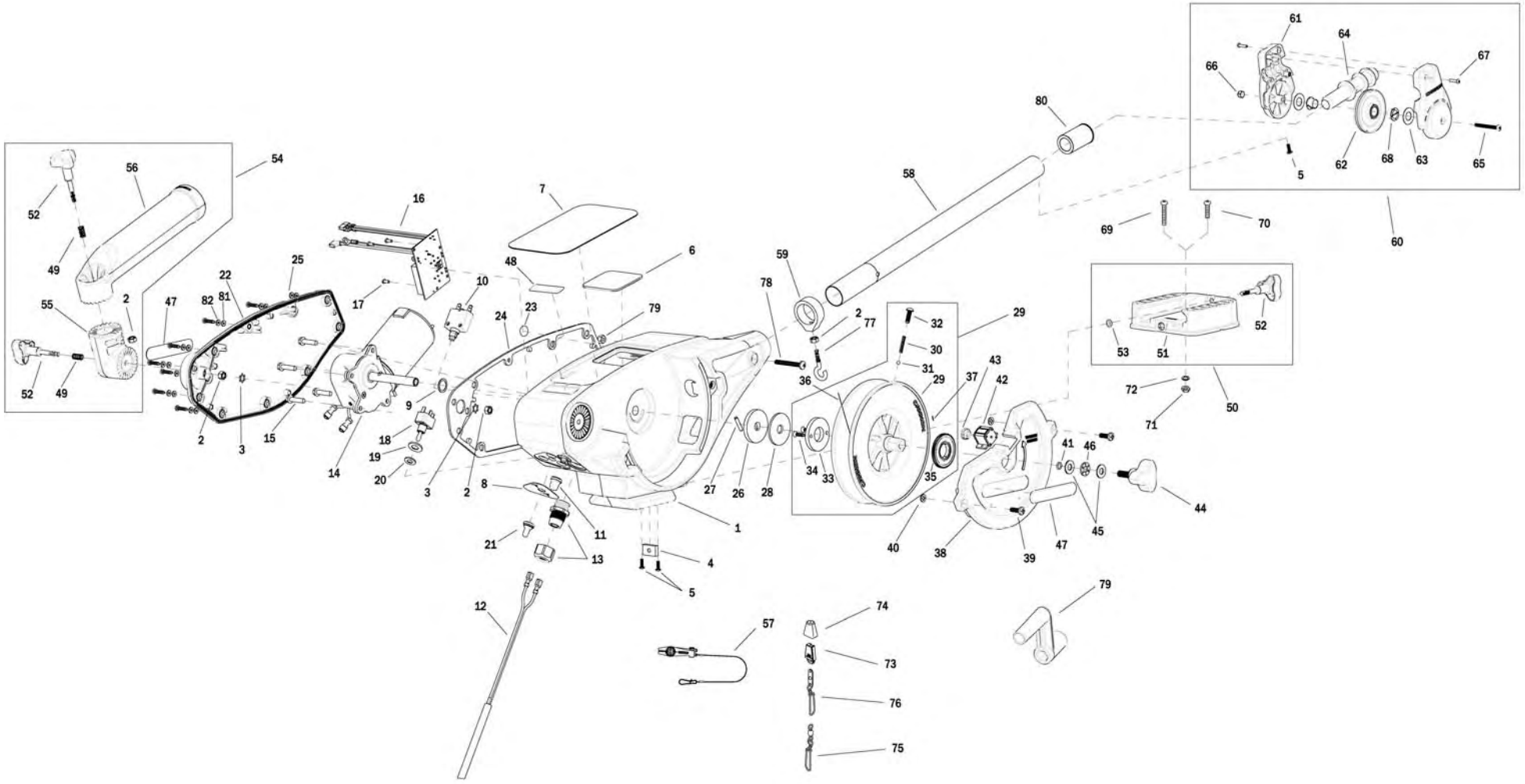

CANNON
RUN DEEP

1902301 Magnum 5 ST /E

In the U.S.A., replacement parts may be ordered directly from CANNON Parts Dept., 121 Power Drive, Mankato, Minnesota 56001. Be sure to provide the MODEL and SERIAL numbers of your downrigger when ordering parts. Please use the correct part numbers from the parts list. Payment for any parts ordered from the CANNON parts department, may be by cash, personal check, Discover Card, MasterCard or VISA. To order, call 1-800-227-6433 or FAX 1-800-527-4464.

1	3392524	FRAME, RAW
2	2263102	NUT-HEX 1/4-20 SS 300SRS
3	3394722	INSERT, PUSH ON
4	3394702	INSERT, BASE
5	2372100	SCREW-#8-18 X 5/8 THD* (SS
6	3396510	LENS-WINDOW MAG DTIV
7	3395559	DECAL, MAG 5
8	3396601	SEAL PLATE, MAGNUM
9	3391730	WASHER, SEAL, DATA
10	3398205	CIRCUIT BREAKER, 25 AMP
11	1221491	BOOT CIRCUIT BREAKER
12	3993220	ASSY, POWER CABLE, RETRO(SUB)
13	3392920	STRAIN-RELIEF, HEYCO M4502
14	3996515	MOTOR/GEAR HOUSING ASSY
15	3393411	SCREW-FLANGE HEX HI-LO
16	3394006	ASY PCA, MAGNUM
17	2302104	SCREW-#6-20 X 3/8
18	2286792	SWITCH, TOGGLE
19	3391722	WASHER, FLAT
20	2286793	HDW SHIM SWITCH .75X.1
21	1221490	BOOT SWITCH
22	3390203	COVER, MOTOR
23	401966-3	MIC VENT,PTFE LU LRA MATERIAL
24	3396902	GASKET, COVER
25	3393480	SCREW-#10X.75"PPH HI-LO SS
26	3391907	PLATE, CLUTCH SHAFT
27	3392640	PIN, DRIVESHAFT
28	3391711	PAD, CLUTCH
29	3397907	REEL, ROUGH, 3.75" OD
30	3392707	SPRING, REEL
31	3396020	BALL BEARING, REEL
32	3393474	SCREW-DRIVE #14 X .75" SS
33	3391906	PLATE, CLUTCH REEL
34	3393418	SCREW-#10-16X.75"HI-LO SS
35	3333011	GEAR REEL (METRIC)
36	1015391	WIRE, .034 DIA, CAMO BULK
37	9100070	CON LEADER SLEEVE
38	3390205	COVER, REEL
39	2373434	SCREW-1/4-20 X 3/4 SS PPMS
40	2071718	WASHER #10 NYLON RETAINING
41	3394605	O-RING, KNOB
42	3320011	COUNTER 3 DIGIT (METRIC)
43	3333010	GEAR COUNTER (METRIC)
44	3390103	KNOB, SOFT GRIP, CLUTCH
45	9010310	HDW WASHER, THRUST
46	9010280	HDW BEARING, THRUST
47	3395634	DECAL- SIDE, BLACK
48	3395710	DECAL-PIC BLACK
49	2287002	HDW SPRING RELEASE PIN
50	3991930	ASY, MNT BASE DT/MAG(SUB)
51	3391955	BASE-MOUNT, DT PRO/MAG ST
52	3390101	KNOB-CANNON, SOFT GRIP
53	3393000	RING, RETAINING, 1/4" SHAFT
54	3991904	ASSY-CNN, ROD HOLDER
55	3394200	ARM, DUAL AXIS-ROD HOLDER
56	3392033	TUBE, DUAL AXIS RD HLDR
57	2277002	ASY HDW RELEASE UNIVERSAL
58	2290828	24" BOOM - HEAVY DUTY
59	3397900	BALL HOOK EXTRUSION
60	3990200	ASSY-CNN, BOOM END (SUB)
61	3392520	CASE, PULLEY
62	3392300	SHEEVE, PULLEY
63	3391507	SHIM, BOOM END
64	3392013	BOOM END, NEW
65	3393485	SCREW-#10-24X1.75 PPHMS S
66	3393124	NUT-#10-32 NYLOK 18-8 SS
67	2303412	SCREW-#6-20 X 5/8 SELF TAP
68	3390005	BEARING-NYLINER, #8L5-1/2-F
69	9280720	HDW SCR 1/4 20X2 TRUSS HD PHIL
70	9280713	HDW SCR 1/4 20X1 1/2 TRUSS HEA
71	2263103	NUT-1/4-20 NYLOCK SS
72	2371712	WASHER-FLAT 9/32 X 5/8 X 1/16
73	9100100	CON TERMINATOR
74	9100101	CUSHION SLEEVE TERMINATOR
75	9100620	HDW SNAP SWIVEL 4/0-37 MARLIN
76	2200148	ASY SNAP & INSULATOR
77	9040040	HDW BOLT 1/4-20 ROLLEDTHD HOOK
78	3393461	SCREW-1/4-20 x 2" SS, PPH
79	3390910	HANDLE-CRANK, MANUAL
80	3395905	ADAPTER, BOOM END
81	3391732	WASHER, SEALING
82	3394602	WASHER, FLAT, #8, SS
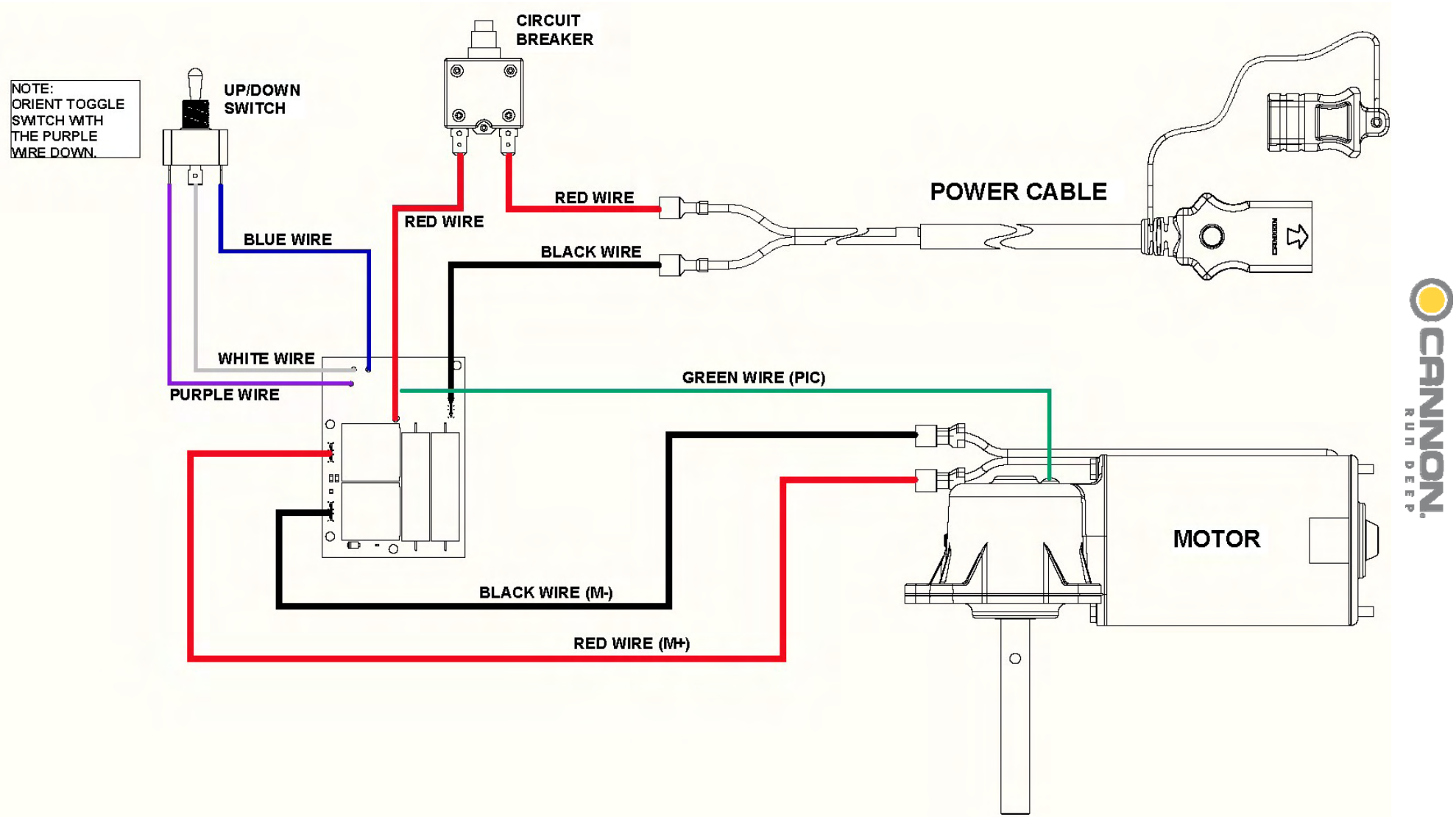
Magnum Series Wiring Diagram